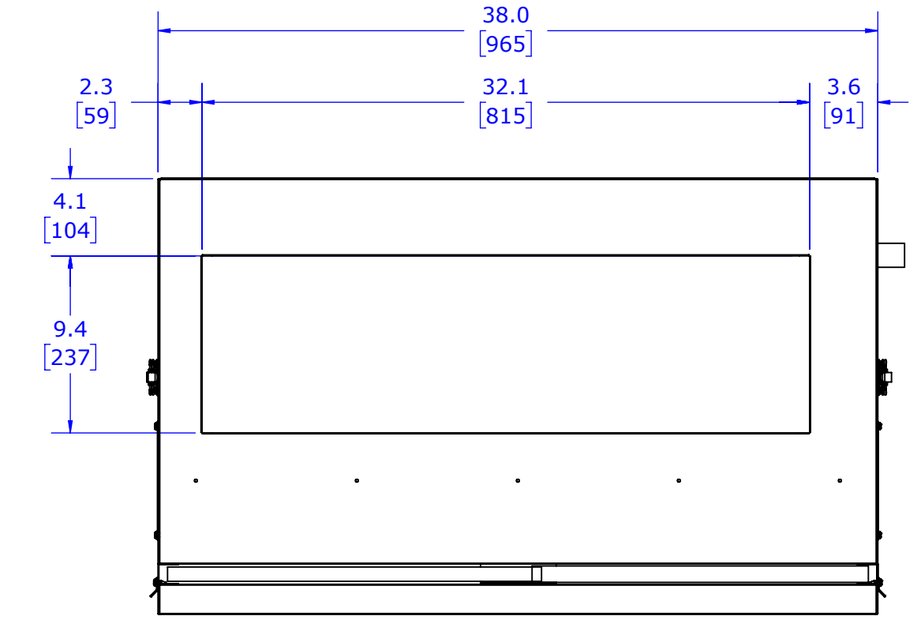

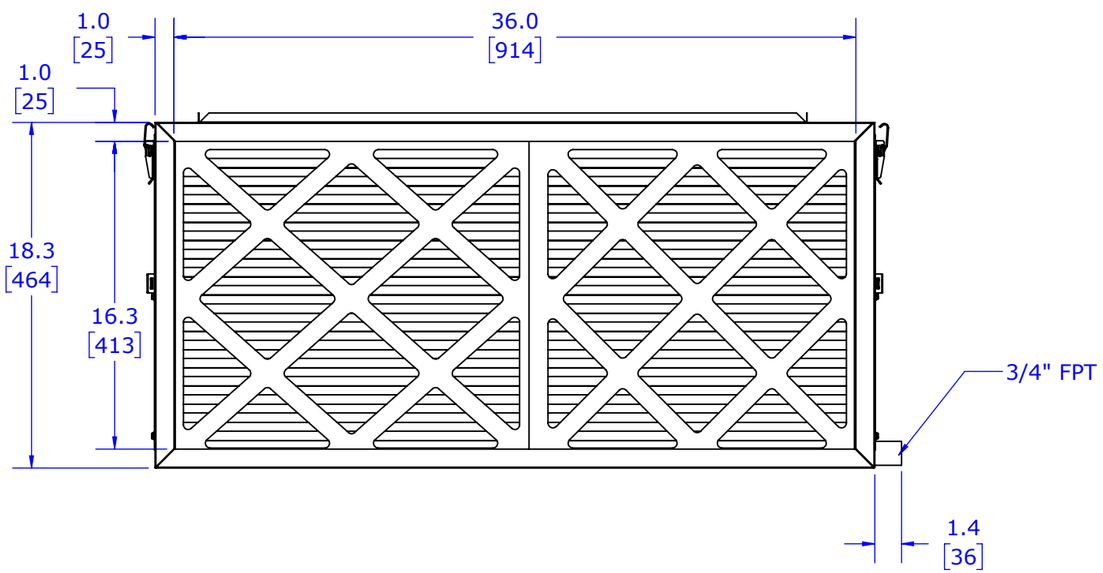

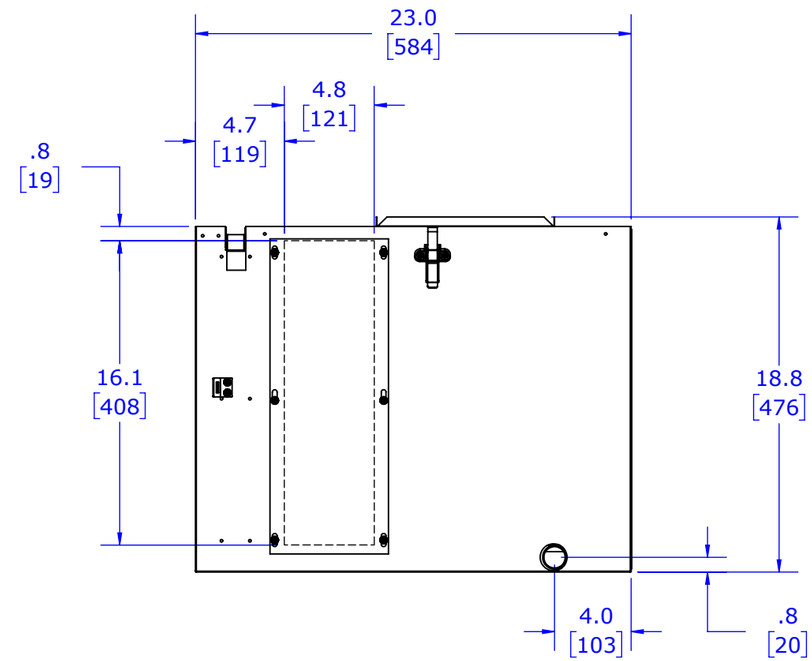

NOTES:

1. ALL DIMENSIONS ARE IN INCHES [MM] UNLESS OTHERWISE SPECIFIED.

DATE	MODEL NO.
11/07/17	M4860V1